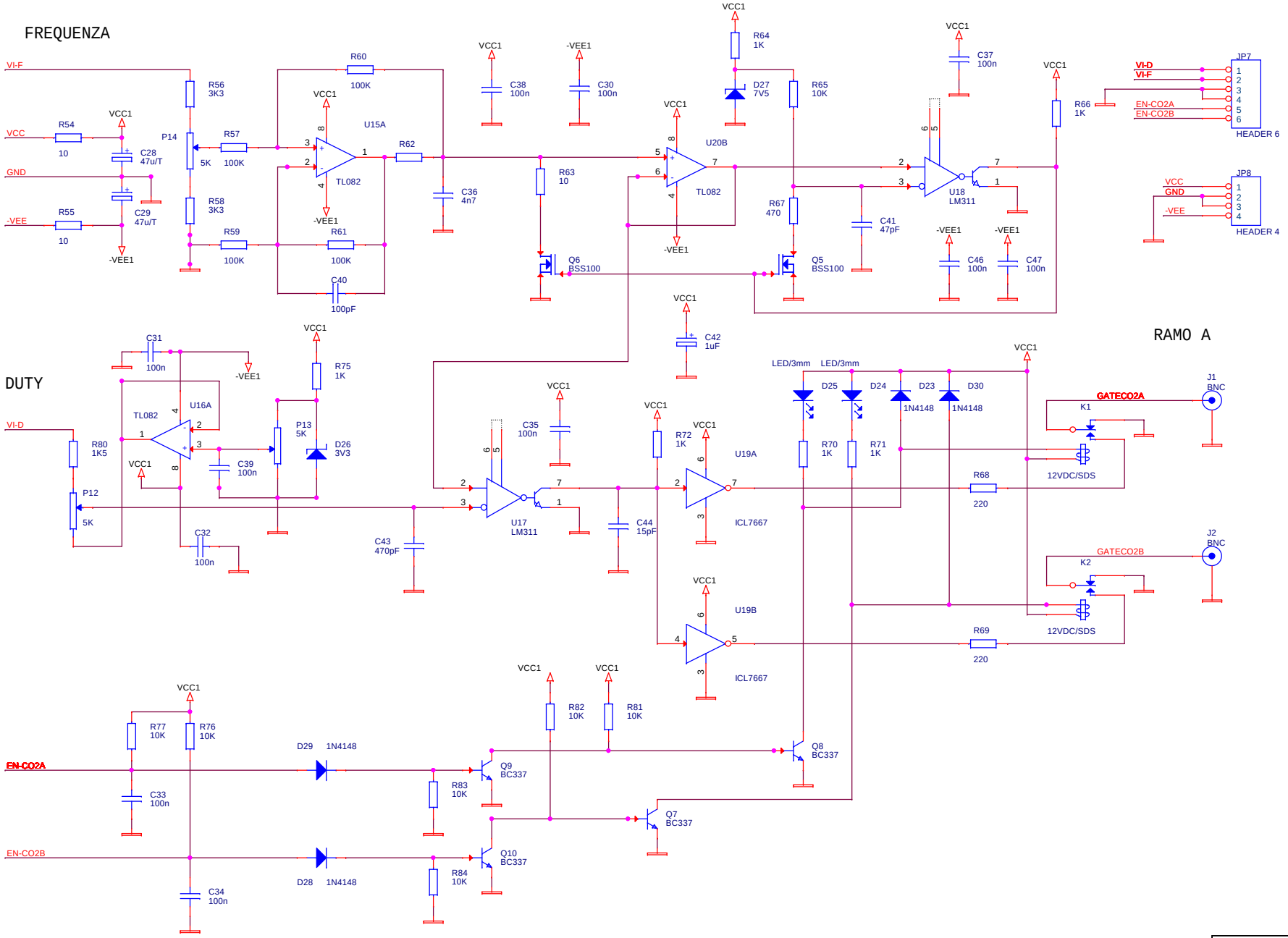

DS4
Via Giardini 32
24066 Pedrengo
BERGAMO
Italy

Title

Document Number
F-DUTY

Rev 2.1

Date: Wednesday, September 16, 2015 Sheet 1 of 1